HYVAIR

INDUSTRIAL FLUID POWER COMPONENTS
AND SYSTEMS

HV SERIES

Manual/ Proportional Directional Valves

HV39

HV9

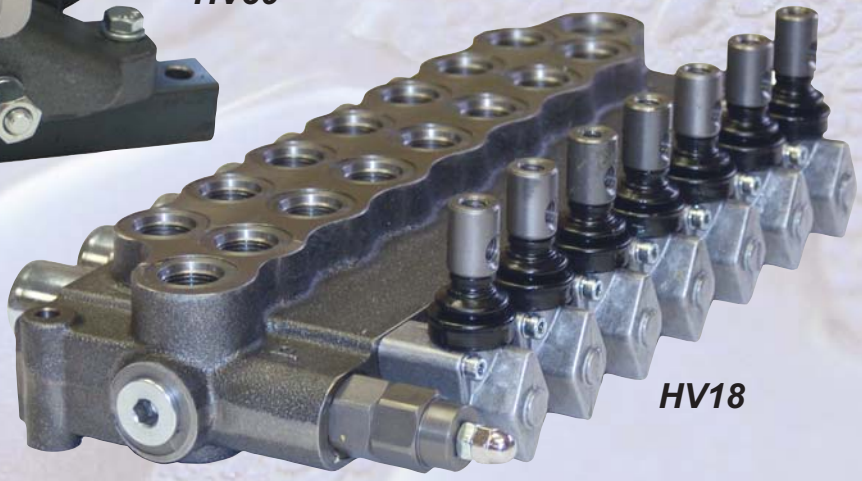

HV18

EPHV39
Lever Actuated with Optional Proportional Control

31341 Friendship Drive, Magnolia, TX 77355 • Tel.: 281-259-7768 Fax: 281-259-7249 • www.hyvair.com

HV39 Series
Sectional Lever Valves

General Features

Standard Material Specifications
- High Strength Cast Iron
- Hard Chrome Plated Interchangeable Spools
- Steel Spring Caps
- Aluminum Lever Caps
- NBR Seals

Standard Features
- 1” 1 to 8 Spool Monoblock Valve
- Adjustable Relief Valve (500-5000 psi)
- Housed Knuckle Joints
- Parallel Circuit
- Double Action
- Load Hold Check Valve in Each Section

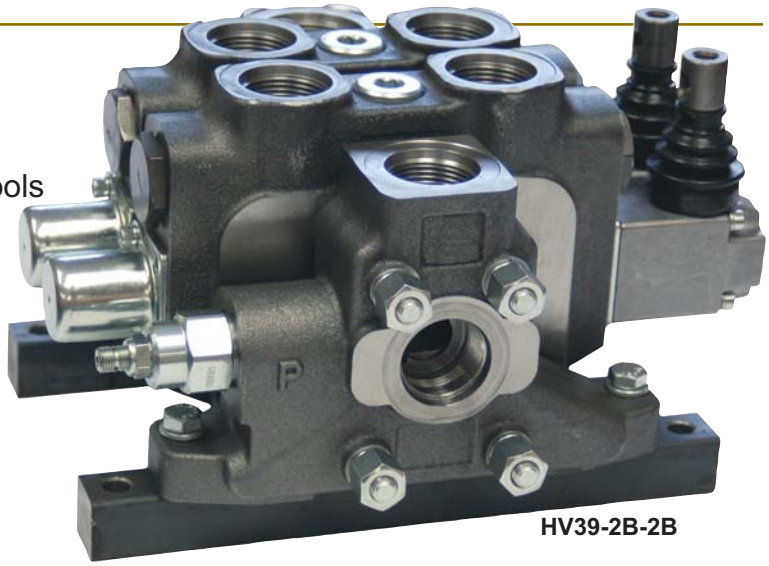
HV39-2B-2B

HV39 is the largest valve in the HV Series with capacity of 39.6 gpm (150 lpm) flow rate and available up to eight spools. The HV39 Series serves as an ideal control device for applications such as: wheel loaders, back hoes, garbage trucks, roll-off trucks, hydraulic presses, mining machinery etc.

General Specifications

Standard Working Conditions
- Flow Rate.....39.6 gpm (150 lpm)
- Maximum Operating Pressure.....4640 psi (320 Bar)
- Maximum Back Pressure.....435 psi (30 Bar)
- Recommended Fluid Temperature Range.....-4° to 176°F (-20° to 80°C)
- Ambient Temperature Range.....-31° to 140°F (-35° to 60°C)
- Recommended Oil Viscosity Range.....10 cSt to 75 cSt
- Internal Leakage (at 1450 psi (100 Bar); 32 cSt, 104°F (40°C).....4 to 9 cc/ min
- Recommended Oil Filtering.....β 10 > 75
- Tie Rod Tightening Torque.....30 Nm (265.5 in/ lbs)
- Maximum Contamination Level.....Class 9 (NAS 1638)
  19/16 (ISO 4406)

Technical Specifications
- Number of Spools.....1 - 8
- Weight.....Varies by number of spools selected (see following page)

31341 Friendship Drive, Magnolia, TX 77355 • Tel.: 281-259-7768 Fax: 281-259-7249 • www.hyvair.com

Dimensional Data

Units: mm (inches)

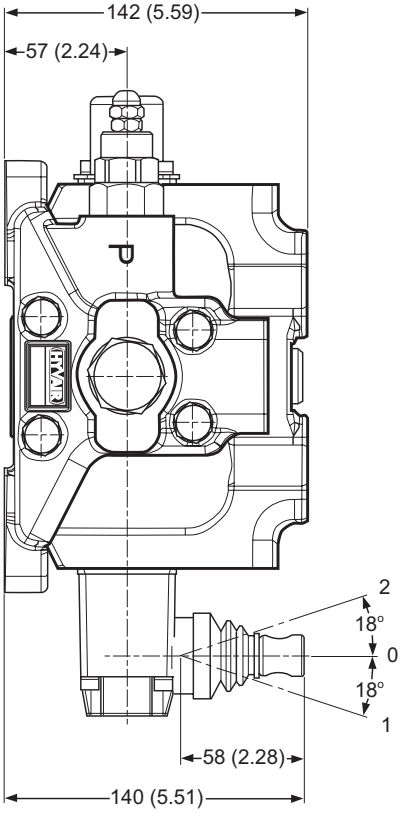

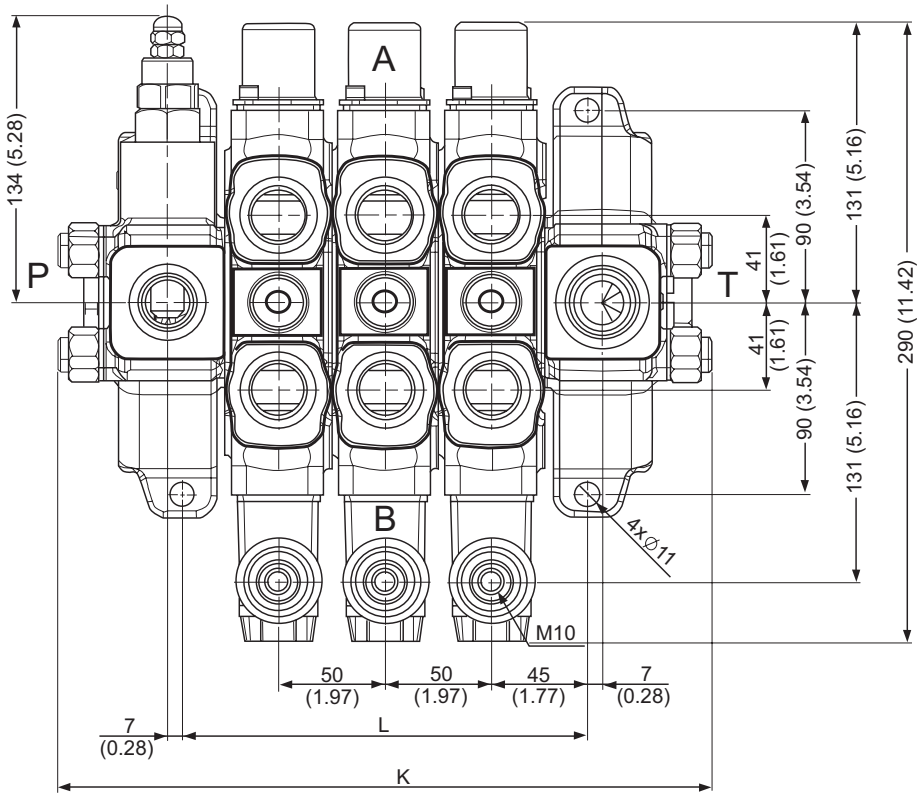

Type	L mm (inch)	K mm (inch)	Weight kg (lbs)
HV39 - 1	114 (4.49)	206 (8.11)	14.9 (32.8)
HV39 - 2	164 (6.46)	256 (10.08)	21.8 (48.0)
HV39 - 3	214 (8.43)	306 (12.05)	28.3 (62.3)
HV39 - 4	264 (10.39)	356 (14.02)	34.8 (76.6)
HV39 - 5	314 (12.36)	406 (15.98)	41.3 (90.9)
HV39 - 6	364 (14.33)	456 (17.95)	47.8 (105.2)
HV39 - 7	414 (16.30)	506 (19.92)	54.3 (119.5)
HV39 - 8	464 (18.27)	556 (21.89)	60.8 (133.8)

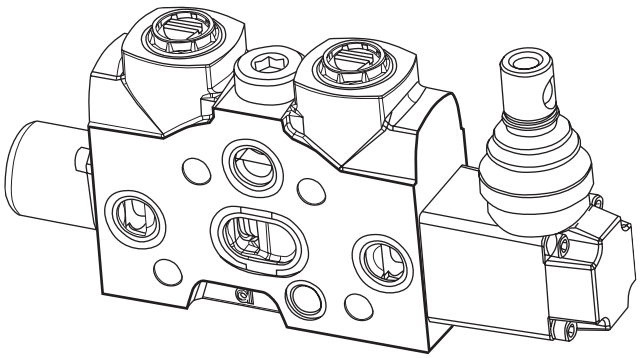

Main Relief Valve

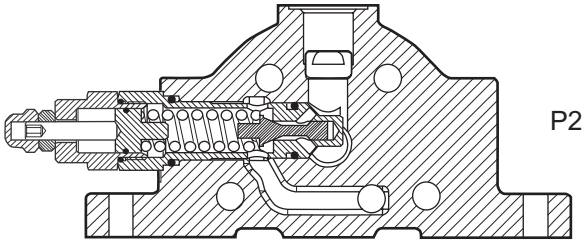

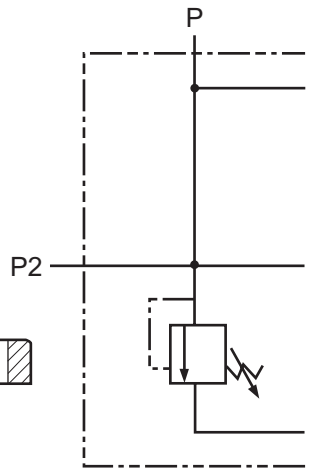

Inlet with Main Relief Valve

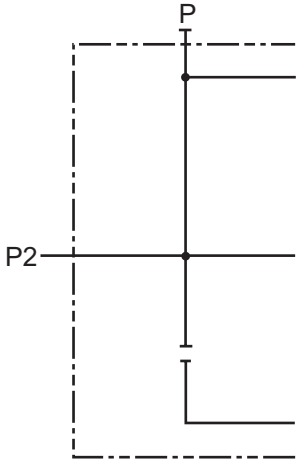

Inlet without Main Relief Valve

Hydraulic Circuit

Parallel Circuit

When the spool is operated, it intercepts the switch gallery by diverting the flow of oil to service port A or B. If two or more spools are actuated at the same time, the oil will power the service port that has the lower load by selecting the path with the least resistance; by throtting the spools, the flow of oil can be divided between two or more service ports.

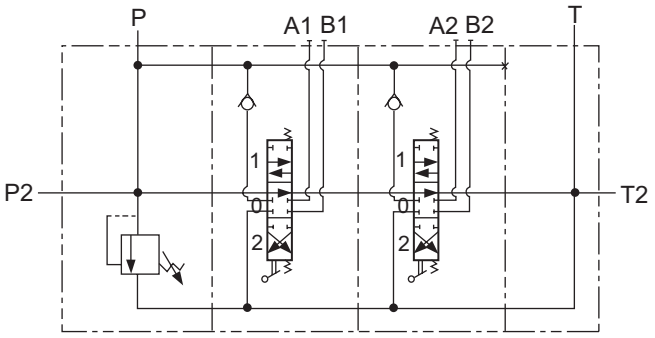

Series Circuit

When the spool is operated, it intercepts the switch gallery by diverting the flow of oil to service port A or B. The oil that flows back from the actuator is carried to the switch gallery thus making it available to the service ports downstream from the series section. The pressure drop downstream is added to the pressure drop of the section itself.

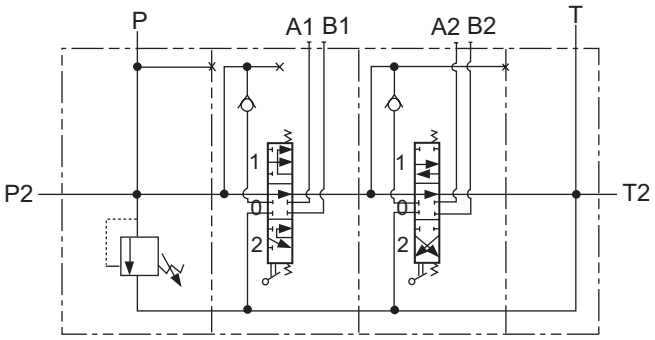

Spool Control Position/ Pressure Drop Curves

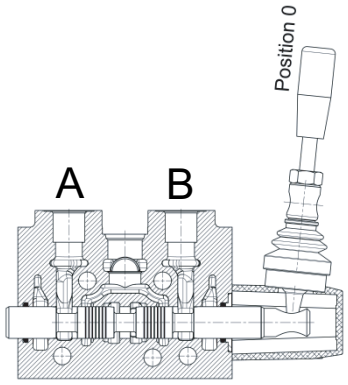

Spool-neutral position:
POSITION 0

P - T

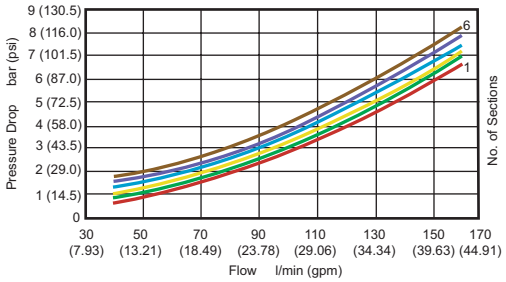

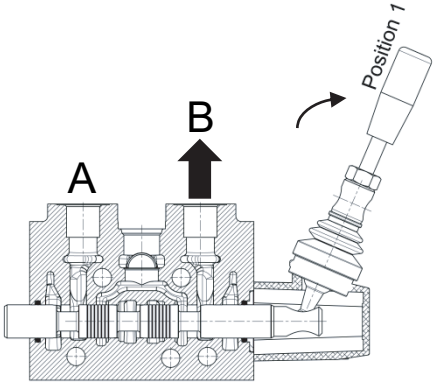

Spool-out position:
POSITION 1

P - A/B

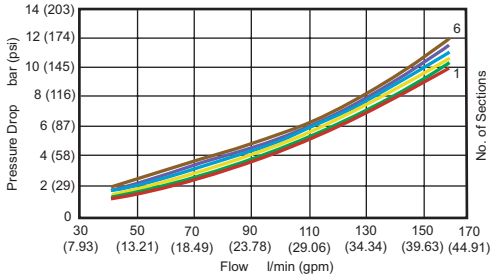

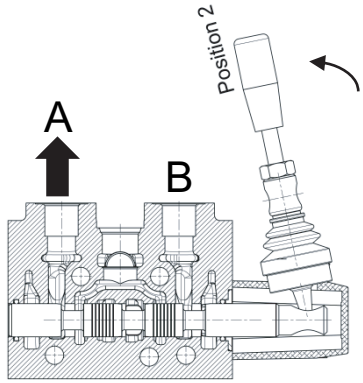

Spool-in position:
POSITION 2

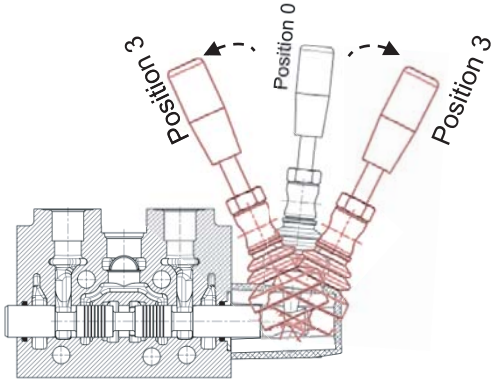

4 positions and 4th position can be spool-in or spool-out position optionally:
POSITION 3

A/B - T

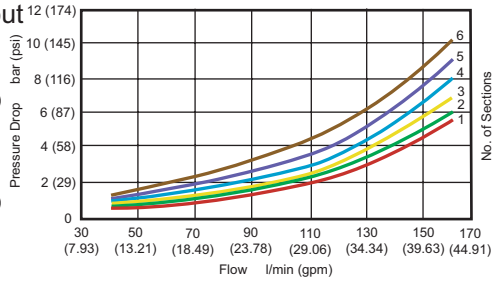

Ordering Information

HV39 - 2 - 2 H RV2 - *

HV39 Series
Sectional
(Manual) Lever Valve

Sections
1 = 1 Section
2 = 2 Sections
3 = 3 Sections
4 = 4 Sections
5 = 5 Sections
6 = 6 Sections
7 = 7 Sections
8 = 8 Sections

Configuration
2 = 3 position, spring centered
4 = 3 position, detented

Function
B = All Ports Blocked
C = P to T, A & B Blocked
F = P Blocked, A & B to T
H = All Ports Open

Relief Valve
omit = No Relief
RVA = Relief Valve in A Port
RVB = Relief Valve in B Port
RV2 = Relief Valve in A&B Ports

Spool Codes for
Additional Sections

Options
HVHANDLE = Handle
HV39-DK = Detent Kit
HV39-PB = Power Beyond Sleeve
HV39-CCP = Closed Center Plug
HV39-WP-DRV = Work Port Direct Acting Relief Valve
HV39-WP-ACV = Work Port Anti Cavitation Valve
HV39-INLET = Inlet
HV39-OUTLET = Outlet
HV39-IN-PLG = Inlet Relief Plug
HV39-IN-POR = Inlet Relief- Pilot Operated Relief
HV39-TC1, 2 & 3 = Tie Rod Kit (1-3 Spools)
HV39-TC4, 5 & 6 = Tie Rod Kit (4-6 Spools)
HV39-TC7 & 8 = Tie Rod Kit (7 & 8 Spools)

Units: mm (inches)